PART NO.	A55000–109	REV	ECO	DATE	APP
		C	100382	03–20–14	TLM

MATERIALS & SPECIFICATIONS

HOUSING:
ALUMINUM 6061–T6, NICKEL PLATE PER SAE–AMS–2404.

INSULATOR:
THERMOPLASTIC PER MIL–DTL–32139

CONTACT:
COPPER ALLOY PER MIL–DTL–32139, GOLD PLATED PER ASTM B488, (HARD GOLD) TYPE II CODE C CLASS 1.27.

WIRE:
NEMA HP3 TYPE ET, COLOR CODED IAW MIL–STD–681, SYSTEM 1, USING TEN SOLID REPEATING COLORS.

HARDWARE:
303 STAINLESS STEEL PER ASTM 582.

CURRENT RATING:
1 AMP MAX PER MIL–DTL–32139.

CONTACT RESISTANCE:
71 MILLIOHM MAX (71mV DROP MAX) @ 1.0 AMPS PER MIL–DTL–32139.

PERFORMANCE:
PRODUCT FAMILY TESTED TO AND PASSED THE PERFORMANCE SPECIFICATIONS OF TABLE VIII OF MIL–DTL–32139.

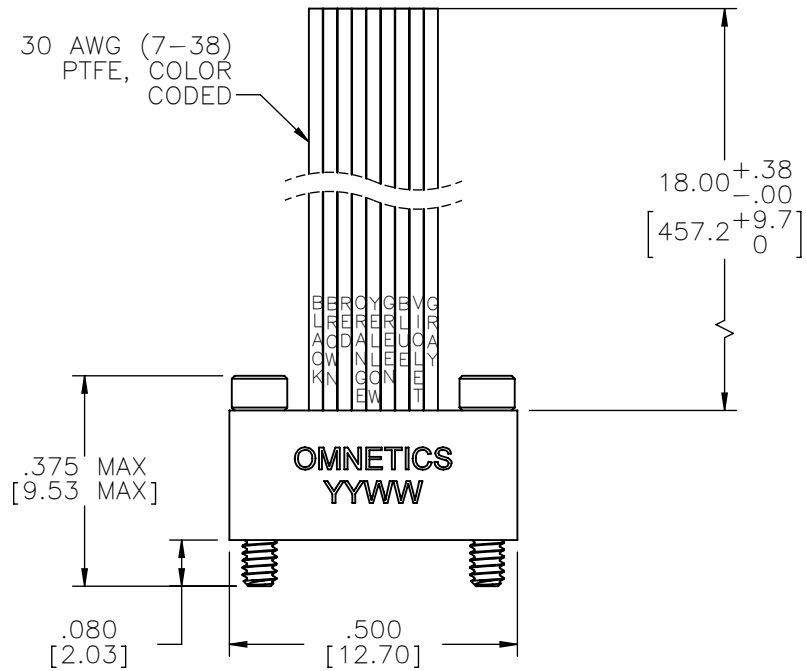

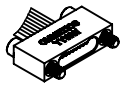

ACTUAL SIZE EXCLUDING WIRE LENGTH

SOCKET #	COLOR
1	BLACK
2	BROWN
3	RED
4	ORANGE
5	YELLOW
6	GREEN
7	BLUE
8	VIOLET
9	GRAY

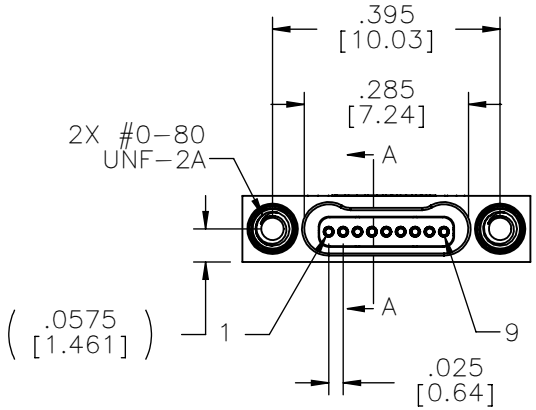

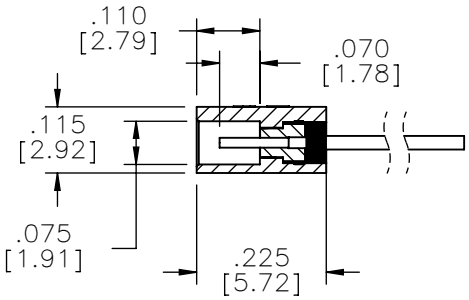

SECTION A–A

NOTE:

DIMENSIONS IN [ ] ARE IN MILLIMETERS UNLESS OTHERWISE NOTED AND ARE FOR REFERENCE ONLY

MBSS / SLDW	THIRD ANGLE ⊕ ⊲	THIS DRAWING CONTAINS CONFIDENTIAL AND PROPRIETARY INFORMATION WHICH IS THE PROPERTY OF OMNETICS CONNECTOR CORP. THIS DOCUMENT MAY NOT, IN WHOLE OR IN PART, BE DUPLICATED, OR DISCLOSED FOR ANY PURPOSE, WITHOUT WRITTEN PERMISSION FROM OMNETICS CONNECTOR CORP.	
	–TOLERANCES– UNLESS OTHERWISE NOTED DIMENSIONS IN INCHES	DFTM. TLM — DATE 06–09–08	TITLE: (9) SOCKET FEMALE Bi-Lobe® CONNECTOR
	2 PL DEC ± .01 3 PL DEC ± .005 4 PL DEC ± .0005 ANGLES ± 1°	CHK'D. — DATE	
		APP'D. — DATE	

OMNETICS CONNECTOR CORPORATION
7260 COMMERCE CIRCLE EAST
MINNEAPOLIS, MN 55432
WWW.OMNETICS.COM

CAGE CODE	61873
DWG NO.	A55000–109
SHEET 1 OF 1	REV C
SCALE: 3:1	